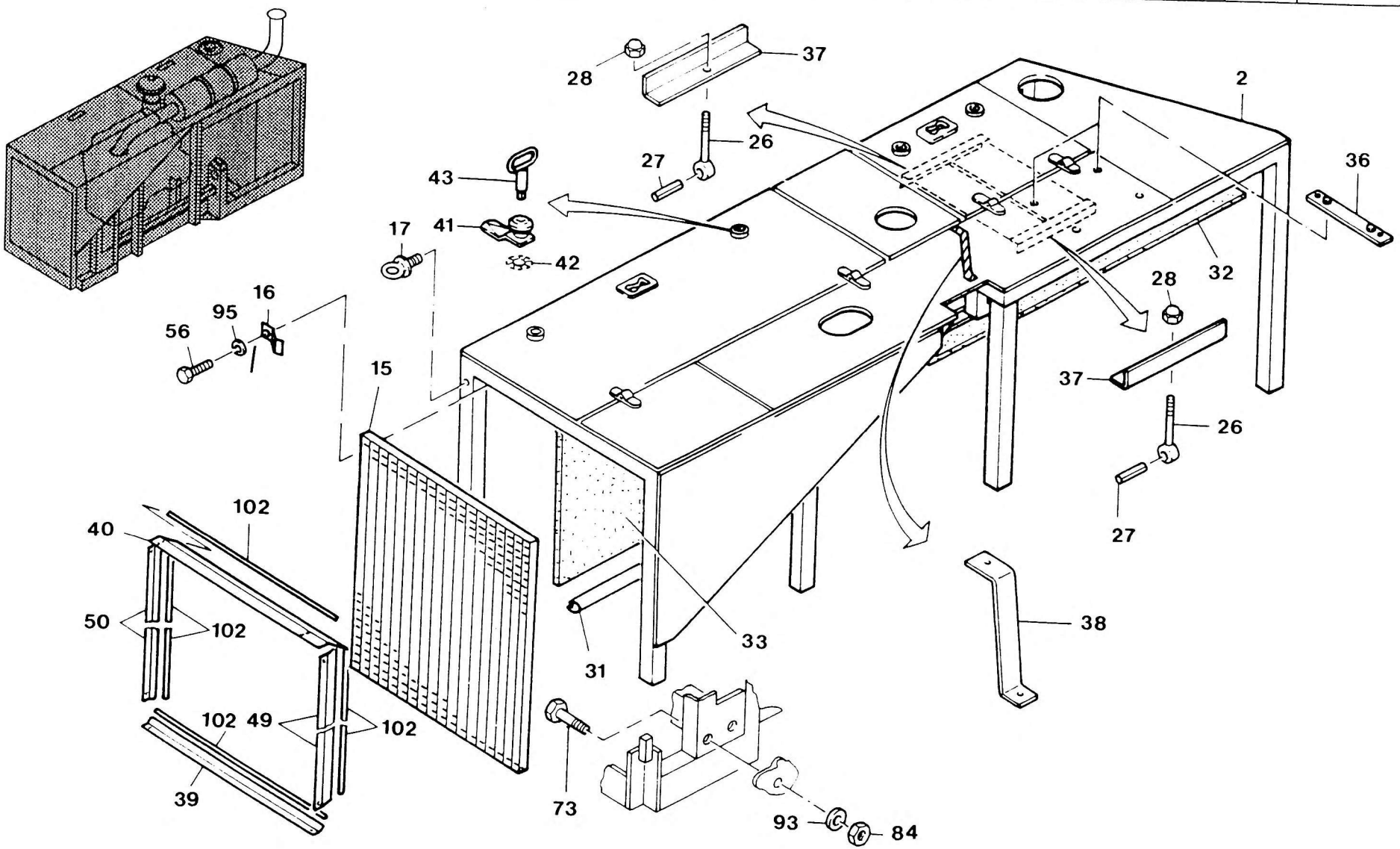
28
37
2
26
27
36
43
17
41
42
32
28
16
95
56
15
37
26
27
102
40
38
50
102
33
31
102
49
102
39
73
93
84

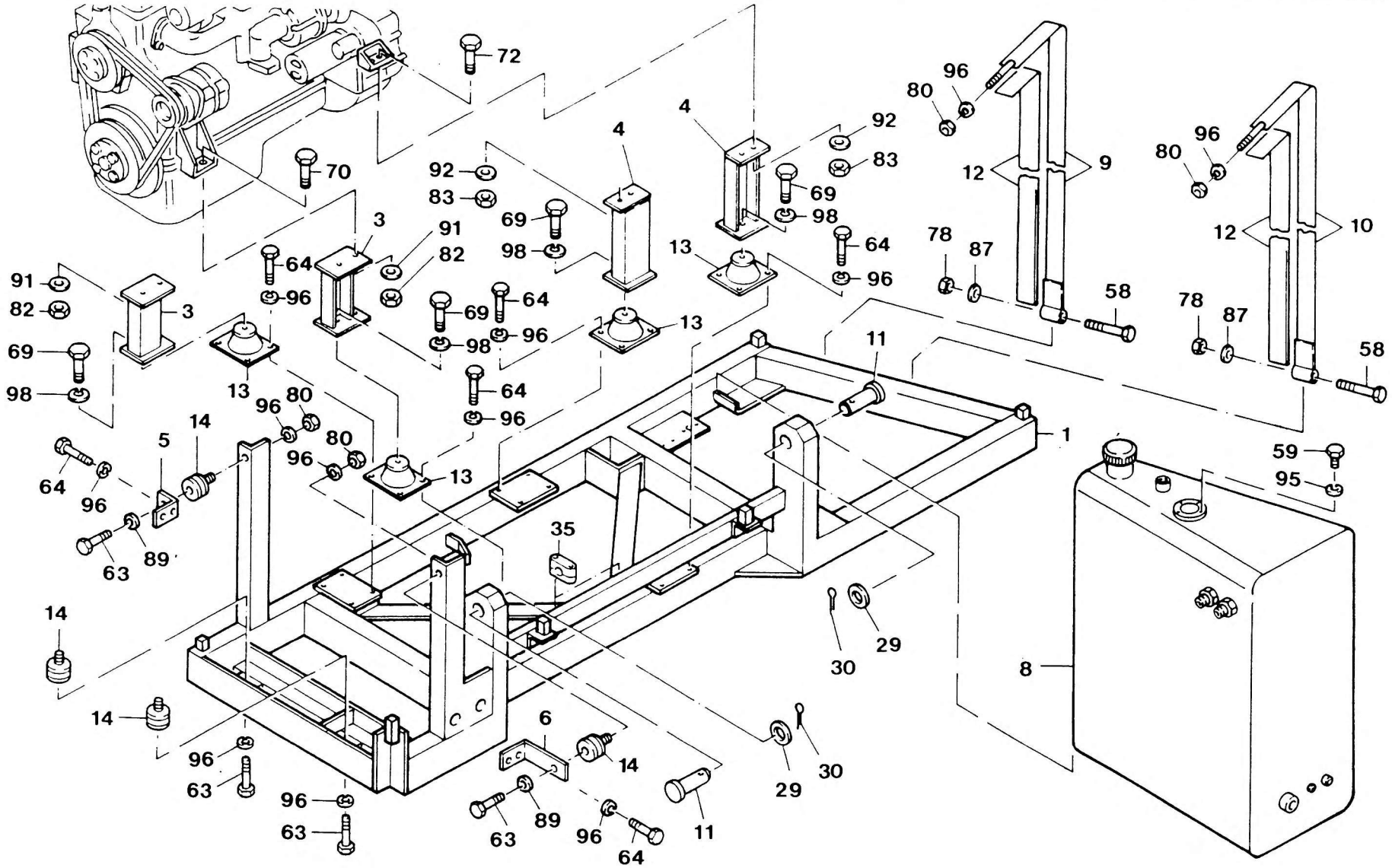
72
70
92
83
69
98
4
3
91
82
64
96
13
78
87
58
12
9
10
80
11
1
59
95
8
5
14
89
63
35
30
29
6
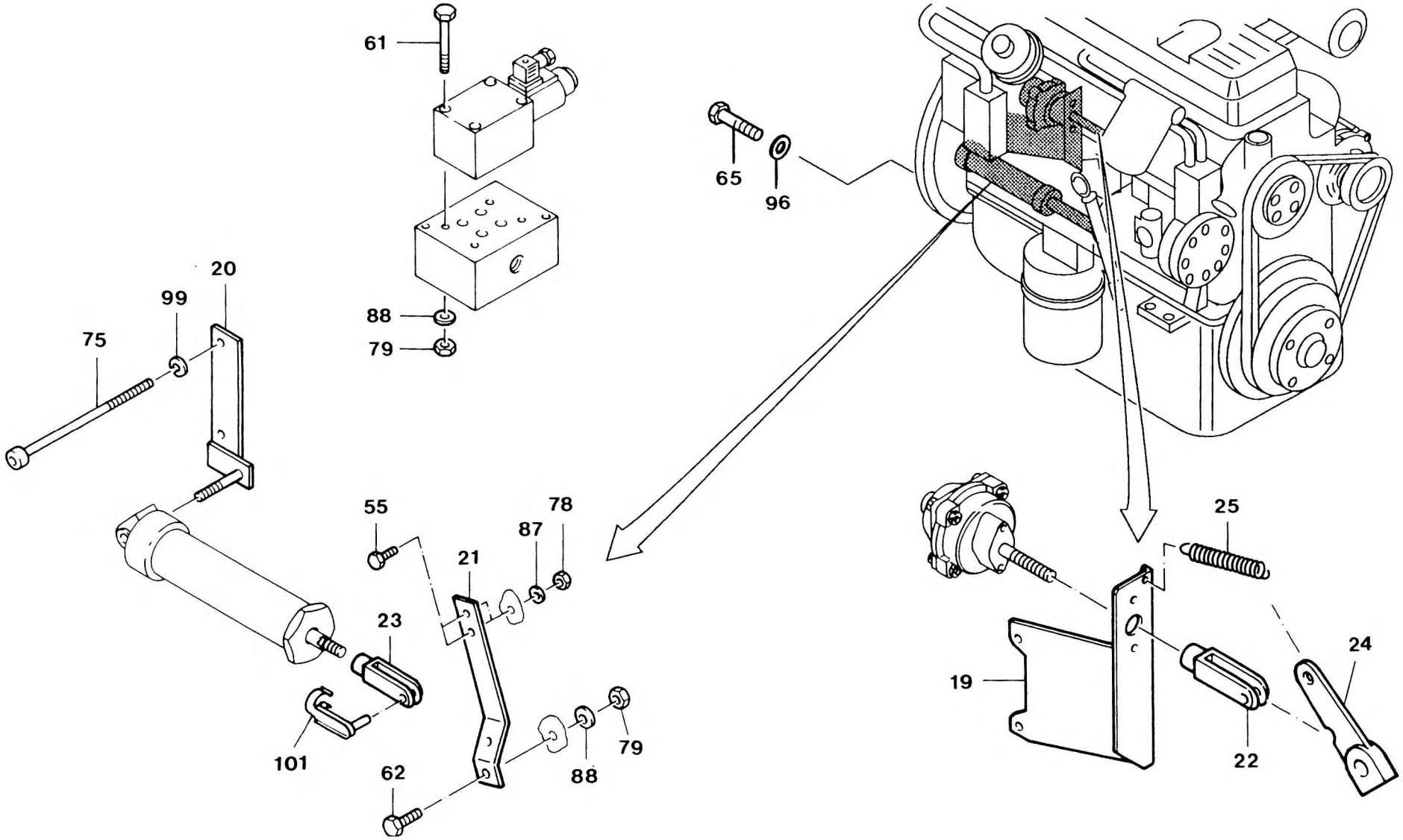
KRUPP	MOTOREINBAU MECHANIK ENGINE ATTACHMENT, MECHANICAL PARTS	BILDTAFEL PICTORIAL DISPLAY			KMK 5110 BE 660 G 626
		04.93	2221599-ETL	3/3